REVISIONS				
ZONE	REV.	DESCRIPTION	DATE	APPROVED

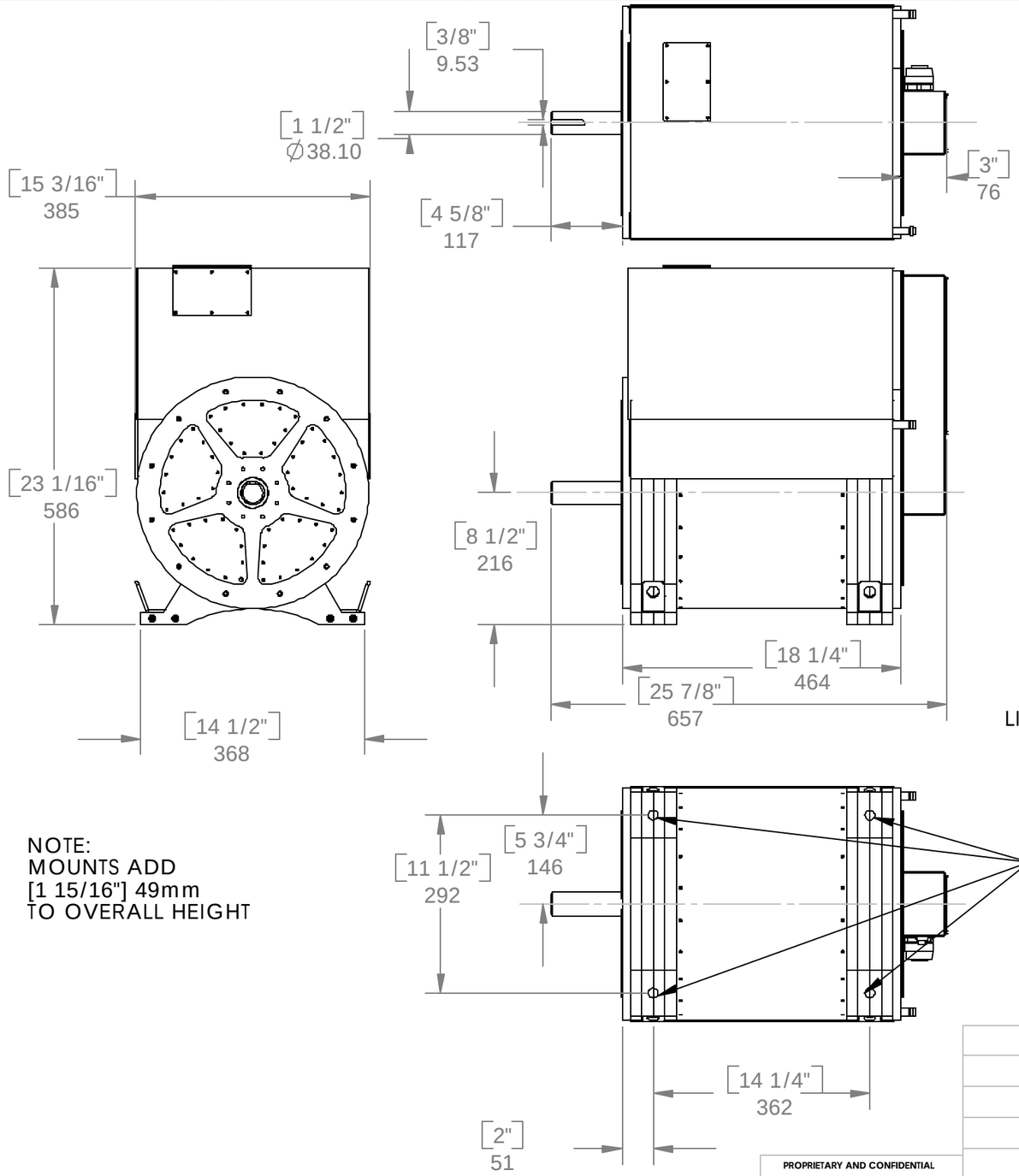

NOTE:
MOUNTS ADD
[1 15/16"] 49mm
TO OVERALL HEIGHT

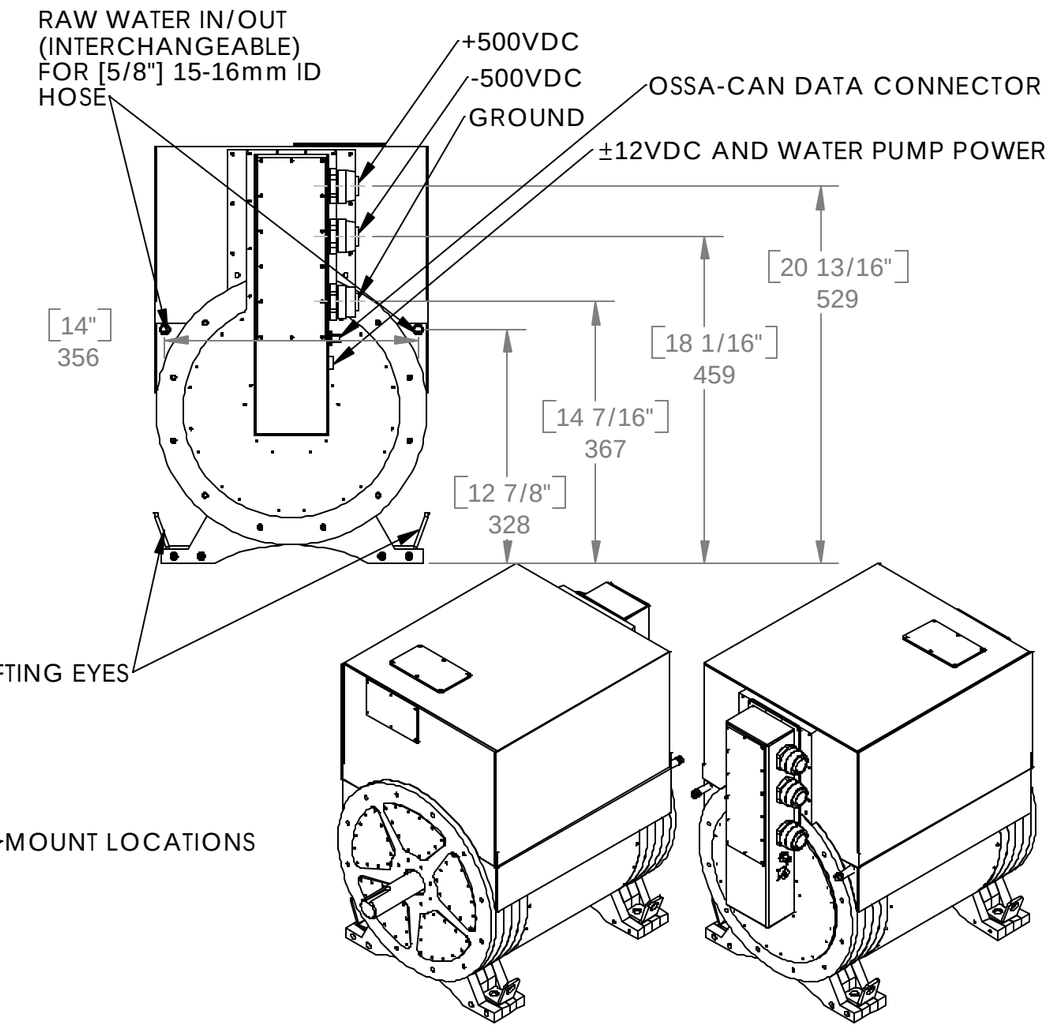

PROPRIETARY AND CONFIDENTIAL

THE INFORMATION CONTAINED IN THIS DRAWING IS THE SOLE PROPERTY OF GLACIER BAY, INC. ANY REPRODUCTION IN PART OR AS A WHOLE WITHOUT THE WRITTEN PERMISSION OF GLACIER BAY, INC. IS PROHIBITED.

NEXT ASSY	USED ON
APPLICATION	

UNLESS OTHERWISE SPECIFIED:
DIMENSIONS ARE IN
[INCHES]
mm

INTERPRET GEOMETRIC TOLERANCING PER:

MATERIAL --

FINISH --

	NAME	DATE
DRAWN	JM-T	2/8/2006
CHECKED		
ENG APPR.		
MFG APPR.		
Q.A.		

COMMENTS:

GLACIER BAY, INC.

TITLE:

K100 Assembly

SIZE	DWG. NO.	REV
B	K100 Assembly	

SCALE: 1:1 | WEIGHT: | SHEET 1 OF 1